Technically Complete, March 11, 2016

APPENDIX III-D.5-6

SIDESLOPE LINER RUNOUT ANALYSES (WITH AND WITHOUT AN ANCHOR TRENCH)

STATE OF TEXAS
JESSE PAUL VARSHO
114074
LICENSED
PROFESSIONAL ENGINEER

3-2-15

This document is released for the purpose of permitting only under the authority of Jesse P. Varsho, P.E. #114074. It is not to be used for bidding or construction. Texas Registered Engineering Firm F-5650

CB&I Environmental & Infrastructure	Client Name:	Rancho Viejo Waste Management, LLC Technically Complete, March 11, 2016		
	Project Name:	Pescadito Environmental Resource Center	Project No.:	148866
	Prepared by:	P.Thomas	Date Prepared:	2/24/2015
	Reviewed by:	Jesse P. Varsho, PE	Date Reviewed:	3/2/2015

TITLE: SIDESLOPE LINER RUNOUT ANALYSES (WITH AND WITHOUT AN ANCHOR TRENCH)

Problem Statement

Determine the required length of liner runout from the top of the landfill liner sideslope — with and without an anchor trench.

References

1. Summary of Geotechnical Design Parameters contained in this Report as **Appendix III-D.5.1**.
2. Design detail of liner termination, including slope of geomembrane liner runout contained in Design Drawing Set in this Application.
3. Koerner, R.M., "Designing with Geosynthetics." Prentice Hall, Fifth Edition (attached pages).
4. GSE (manufacturer) product information for 60-mil textured HDPE geomembrane (attached pages).

Assumptions

- The equations developed by Koerner (**Reference No. 3**) were modified to account for the 3H:1V slope of the geomembrane liner runout (refer to attached schematics following calculations).
- With the assumption that an <u>anchor trench is included</u>, the following equation was derived from the Koerner equation (**Reference No. 3**) to determine the required length of geomembrane runout:

$$T_{allow} = F_U + F_L + 2F_{AT}$$

$$F_U = 0\ (negligible)$$

$$F_L = \left(\frac{q}{\cos\beta}\right)\tan(\delta)\left(\frac{L_{RO}}{\cos\beta}\right)$$

$$F_{AT} = ((\sigma_H)_{AVE})\ \tan(\delta)\ (d_{AT})$$

An equivalent form of the equation is derived as follows:

$$T_{allow} = 0 + \left(\frac{q\tan\delta\ L_{RO}}{\cos^2\beta}\right)(2(\sigma_H)_{AVE})\ \tan(\delta)\ (d_{AT})$$

$$T_{allow} = \left(\frac{q\tan(\delta)L_{RO}}{\cos^2\beta}\right) + 2\left[\gamma\left(d_{AT} + \frac{d_{cs}}{\cos\beta}\right)(1-\sin\emptyset)(\tan\delta)(d_{AT})\right]$$

Solving for L_{RO}:

$$L_{RO} = \frac{(T_{allow}) - 2\left[\gamma\left(d_{AT} + \frac{d_{cs}}{\cos\beta}\right)(1 - \sin\emptyset)(\tan\delta)(d_{AT})\right](\cos^2\beta)}{q\tan\delta}$$

- With the assumption of NO anchor trench is included, the following equation was derived from the Koerner equation (**Reference No. 3**) to determine the required length of geomembrane runout:

$$\sum F_Y = 0: \qquad (T_{allow})\sin\beta = \frac{1}{2}(V_{GM})\cos\beta\left(\frac{L_{RO}}{\cos\beta}\right)$$

$$Solve\ for\ V_{GM}: \qquad V_{GM} = \frac{2(T_{allow})\sin\beta}{L_{RO}}$$

$$\sum F_X = 0: \qquad (T_{allow})\cos\beta = F_U + F_L$$

$$F_L = \left(\frac{q}{\cos\beta} + \frac{1}{2}(V_{GM})\cos\beta\right)\tan\delta\ \left(\frac{L_{RO}}{\cos\beta}\right)$$

$$F_L = \left[\frac{q}{\cos\beta} + \frac{1}{2}\left(\frac{2T\sin\beta}{L_{RO}}\right)\cos\beta\right]\tan\delta\ \left(\frac{L_{RO}}{\cos\beta}\right)$$

$$\therefore\ T_{allow}\cos\beta = 0 + F_L$$

$$= \left[\frac{q}{\cos\beta} + \frac{1}{2}\left(\frac{2T\sin\beta}{L_{RO}}\right)\cos\beta\right]\tan\delta\ \left(\frac{L_{RO}}{\cos\beta}\right)$$

$$= \frac{q\tan\delta\, L_{RO}}{\cos^2\beta} + (T_{allow})(\sin\beta)(\tan\delta)$$

Solving for L_{RO}:

$$L_{RO} = [(T_{allow})(\cos\beta) - (T_{allow})(\sin\beta)(\tan\delta)]\left(\frac{\cos^2\beta}{q\tan\delta}\right)$$

Where,

T_{allow}	=	allowable tension in geomembrane = $(\sigma_{allow})(t)$
σ_{allow}	=	allowable geomembrane stress = $(\sigma_{ult})/(FS)$
σ_{ult}	=	ultimate geomembrane stress
t	=	thickness of geomembrane
FS	=	factor of safety
β	=	slope angle (degrees)
q	=	surcharge pressure = $(d_{cs})(\gamma_{cs})$
d_{cs}	=	depth of cover soil
γ_{cs}	=	unit weight of cover soil
δ	=	angle of shearing resistance (interface friction angle) between geomembrane and soil (or other geosynthetic interface)
L_{RO}	=	length of geomembrane runout (unknown)
σ_h	=	average horizontal stress in anchor trench = $K_o\sigma_v$
σ_v	=	average vertical stress in anchor trench = $(\gamma_{soil})(H_{ave})$
γ_{soil}	=	unit weight of backfill soil
H_{ave}	=	average depth of anchor trench = $(d_{AT}) + \left({d_{cs}}/{\cos\beta}\right)$
K_o	=	$1 - \sin\emptyset$
d_{AT}	=	depth of anchor trench
$\emptyset$	=	angle of shearing resistance of backfill soil
V_{GM}	=	vertical stress due to geomembrane force

- Geomembrane thickness, t = 60 mil = 0.06 inches.
- Assumed geomembrane yield strength = 132 lb/in width (**Reference No. 4**).
- Interface friction angle (δ) for soil to geosynthetic interface, $\delta = 29°$.
- Backfill and cover soils assumed to be lightly recompacted cohesive soil for which the unit weight was estimated to be 132 pcf (**Reference No. 1**).
- A 3-foot thick final cover soil layer over runout (d_{cs} = 3 feet), for which γ_{cs}= 129 pcf.
- Estimated depth of anchor trench is 1.5 feet (d_{AT}= 1.5 feet), for which backfill γ_{AT}= 129 pcf.
- Internal shear strength of backfill soil, $\emptyset = 13.5°$
- Liner sideslope angle (3H:1V), $\beta = 18.4°$

Calculations

First, the allowable tension on the geomembrane is calculated:

$$\sigma_{ult} = 132\frac{lb}{in}\left(\frac{1}{0.06\ in}\right) = 2{,}200\ psi$$

Assume a Factor of Safety (FS) = 2:

$$\sigma_{allow} = \frac{\sigma_{ult}}{FS} = (2{,}200\ \text{psi} / 2) = 1{,}100\ \text{psi}$$

$$T_{allow} = (\sigma_{allow})(t) = (1{,}100\ psi)(0.06\ inches)\left(\frac{12 inches}{1 foot}\right) = 792\frac{lb}{ft}$$

Calculate the length of runout (L_{RO}) required when an anchor trench is utilized.

$$L_{RO} = \frac{(T_{allow}) - 2\left[\gamma\left(d_{AT} + \frac{d_{cs}}{\cos\beta}\right)(1 - \sin\emptyset)(\tan\delta)(d_{AT})\right](\cos^2\beta)}{q\tan\delta}$$

$$L_{RO} = \frac{\left(792\frac{lb}{ft}\right) - 2\left[(129pcf)\left(1.5ft + \frac{3ft}{\cos(18.4°)}\right)(1 - \sin(13.5°))(\tan(29°))(1.5ft)\right](\cos^2(18.4°))}{(3ft)(129pcf)\tan(29°)}$$

$$\boxed{L_{RO} = 0.47\ ft}$$

Calculate the length of runout required when an anchor trench is not utilized:

$$L_{RO} = [(T_{allow})(\cos\beta) - (T_{allow})(\sin\beta)(\tan\delta)]\left(\frac{\cos^2\beta}{q\tan\delta}\right)$$

$$L_{RO} = \left[\left(792\frac{lb}{ft}\right)(\cos 18.4°) - \left(792\frac{lb}{ft}\right)(\sin 18.4°)(\tan 29°)\right]\left(\frac{(\cos^2 18.4°)}{(3ft)(129pcf)(\tan 29°)}\right)$$

$$\boxed{L_{RO} = 2.57\ ft}$$

Results

Assuming 3-feet of final cover soil over the liner runout and a 1.5-foot deep anchor trench, the minimum required length of liner runout between the top of liner slope and the **edge of the anchor trench** was calculated to be approximately **0.47-feet** in the horizontal direction. If **no anchor trench** is constructed, the minimum required length of liner runout beyond the top of the liner slope is approximately **2.57-feet** in the horizontal direction. A summary of the minimum required lengths of liner runout for the two scenarios are presented below in **Table 1**.

Table 1
Minimum Required Length of Sideslope Liner Runout

With Anchor Trench [1,2]	NO Anchor Trench [1]
0.47 feet	2.57 feet

Notes:
1. Depth of cover soil over liner runout assumed to be 3-feet.
2. Depth of anchor trench assumed to be 1.5-feet.

Schematics:

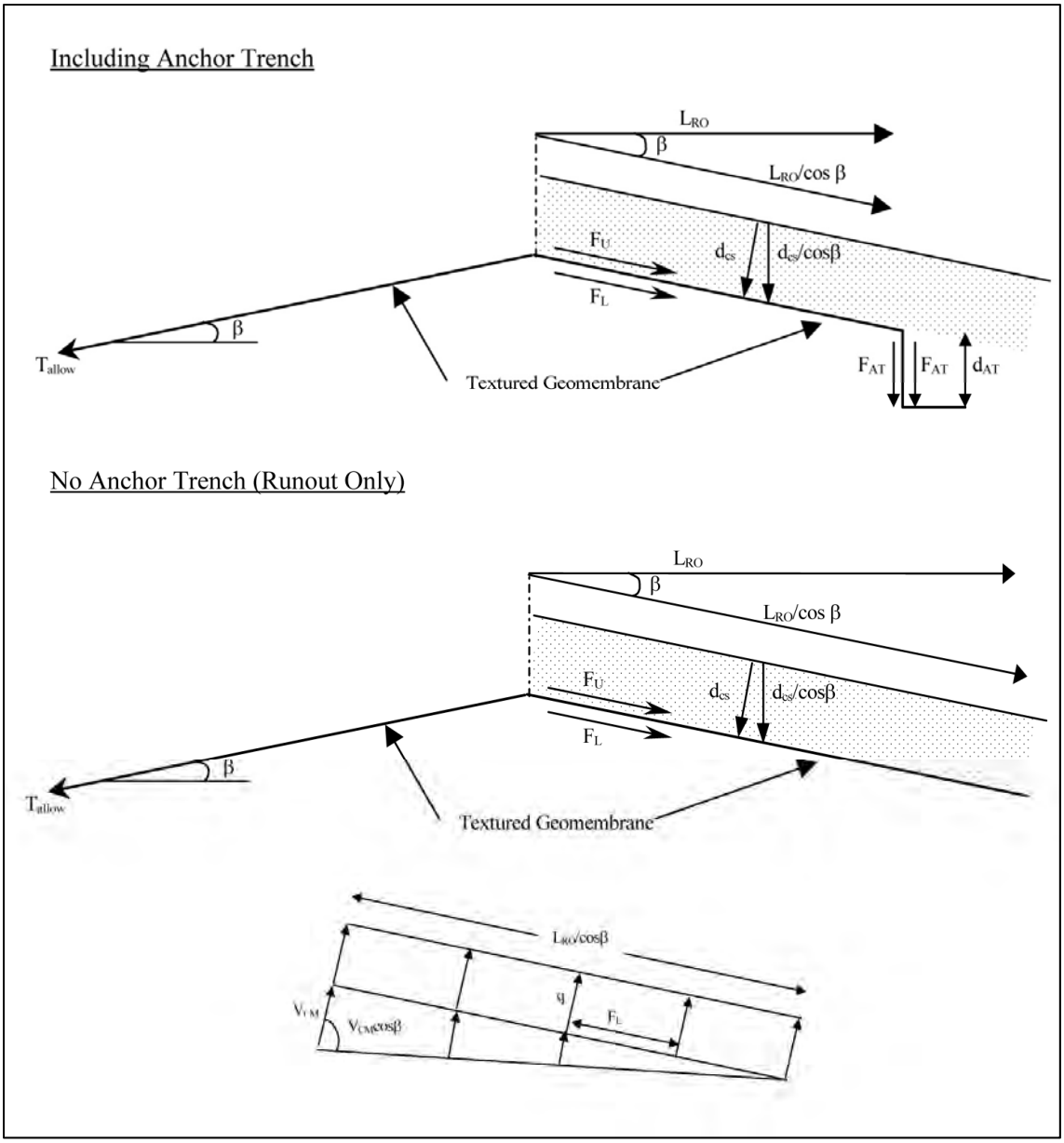
Including Anchor Trench
L_{RO}
β
$L_{RO}/\cos\beta$
F_U
d_{cs}
$d_{cs}/\cos\beta$
F_L
β
T_{allow}
Textured Geomembrane
F_{AT}
F_{AT}
d_{AT}
No Anchor Trench (Runout Only)
L_{RO}
β
$L_{RO}/\cos\beta$
F_U
d_{cs}
$d_{cs}/\cos\beta$
F_L
β
T_{allow}
Textured Geomembrane
$L_{RO}/\cos\beta$
V_{CM}
$V_{CM}\cos\beta$
q
F_L

Reference No. 2

Anchor Trench Equations
(Koerner)

Technically Complete, March 11, 2016

DESIGNING WITH GEOSYNTHETICS

FIFTH EDITION

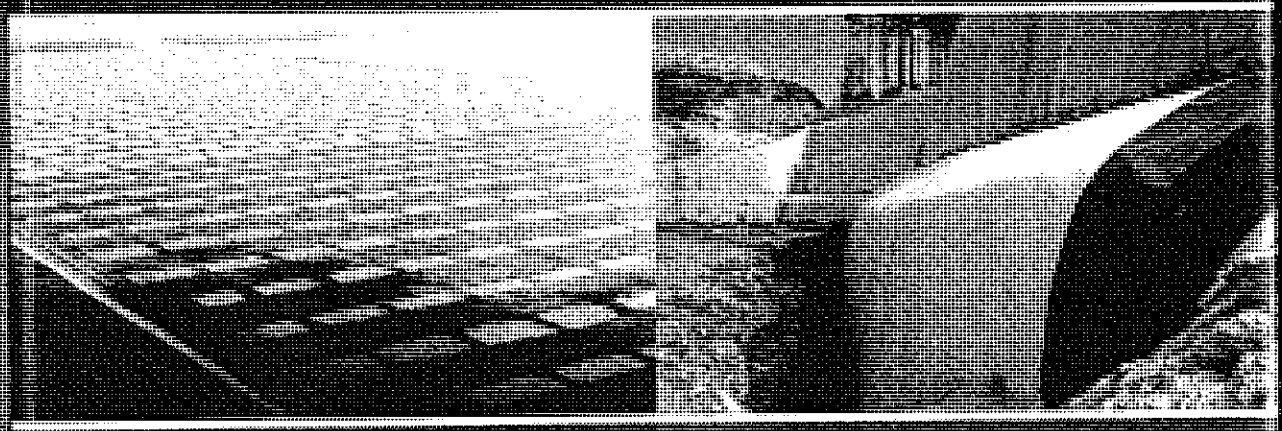

ROBERT M. KOERNER

Technically Complete, March 11, 2016

$$c = (N_A \tan \delta + C_a) \sin \beta \sin\left(\frac{\omega + \beta}{2}\right) \tan \phi$$

$$= (370 \tan 22 + 0) \sin 18.4 \sin\left(\frac{16 + 18.4}{2}\right) \tan 30$$

$$= 8.07 \text{ kN/m}$$

$$\text{FS} = \frac{-b + \sqrt{b^2 - 4ac}}{2a}$$

$$= \frac{62.8 + \sqrt{(-62.8)^2 - 4(37.2)(8.07)}}{2(37.2)}$$

$$\text{FS} = 1.55 \text{ (vs. 1.25 for the constant thickness cross section)}$$

Example 5.12 has also been extended to a set of design curves, as seen in Fignre 5.26b. The anticipated trends are again noted, as is the agreement with the worked out example. Clearly, this type of stabilizing solution can be used if space at the toe of the slope is available. Often it is not or it occupies valuable air space and then geosynthetic reinforcement as discussed in Chapter 3 is the alternative solution.

5.3.6 Runout and Anchor Trench Design

As shown in Figure 5.18 and the profile sections of geomembrane-lined reservoirs, the liner coming up from the bottom of the excavation, covers the side slopes, and then runs over the top a short distance. It often terminates vertically down into an anchor trench. This anchor trench is typically dug by a small backhoe or trenching machine; the liner is draped over the edge, and then the trench is backfilled with the same soil that was there originally. The backfilled soil should be compacted in layers as the backfilling proceeds. Although concrete has been used as an anchorage block, it is rarely justified, at least on the basis of calculations, as will be seen in this section.

Regarding design, two separate cases will be analyzed: oue with geomembrane runout only and no anchor trench at all (as is often used with canal liners), and the other as described above, with both runout and anchor trench considerations (as with reservoirs and landfills). Figure 5.27 defines the first situation, together with the forces and stresses involved. Note that the cover soil applies normal stress due to its weight but does not contribute frictional resistance above the geomembrane. This is due to the fact that the soil moves along with the geomembrane as it deforms and undoubtedly cracks, thereby losing its integrity.

From Figure 5.27, the following horizoutal force summation results, which leads to the appropriate design equation:

$$\Sigma F_x = 0$$

$$T_{\text{allow}} \cos \beta = F_{U\sigma} + F_{L\sigma} + F_{LT}$$

$$= \sigma_n \tan \delta_U (L_{RO}) + \sigma_n \tan \delta_L (L_{RO}) + 0.5\left(\frac{2T_{\text{allow}} \sin \beta}{L_{RO}}\right)(L_{RO}) \tan \delta_L$$

$$L_{RO} = \frac{T_{\text{allow}}(\cos \beta - \sin \beta \tan \delta_L)}{\sigma_n(\tan \delta_U + \tan \delta_L)} \tag{5.25}$$

Technically Complete, March 11, 2016

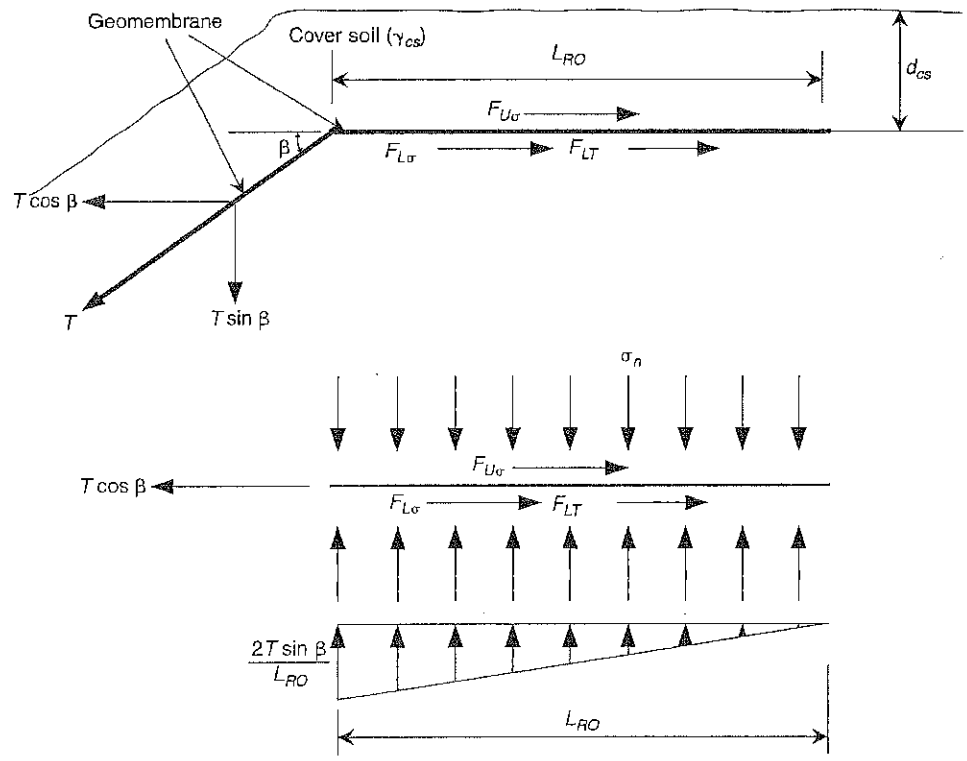

Figure 5.27 Cross section of geomembrane runout section and related stresses and forces involved.

where

T_{allow} = allowable force in geomembrane = $\sigma_{allow}\,t$, where
σ_{allow} = allowable stress in geomembrane, and
t = thickness of geomembrane;
β = side slope angle;
$F_{U\sigma}$ = shear force above geomembrane due to cover soil (note that for thin cover soils tensile cracking will occur and this value will be negligible);
$F_{L\sigma}$ = shear force below geomembrane due to cover soil;
F_{LT} = shear force below geomembrane dne to vertical component of T_{allow};
σ_n = applied normal stress from cover soil;
δ = angle of shearing resistance between geomembrane and adjacent material (i.e., soil or geotextile); and
L_{RO} = length of geomembrane runout.

Example 5.13 illustrates the use of the concept and equations just developed.

Technically Complete, March 11, 2016

Example 5.13

Consider a 1.0 mm thick LLDPE geomembrane with a mobilized allowable stress of 7000 kPa, which is on a 3(H) to 1(V) side slope. Determine the required runout length to resist this stress without use of a vertical anchor trench. In this analysis use 300 mm of cover soil weighing 16.5 kN/m^3 and a friction angle of 30° with the geomembrane.

Solution: From the design equations just presented,

$$T_{\text{allow}} = \sigma_{\text{allow}}\, t$$
$$= (7000)(0.001)$$
$$T_{\text{allow}} = 7.0 \text{ kN/m}$$

and

$$L_{RO} = \frac{T_{\text{allow}}(\cos\beta - \sin\beta \tan\delta_L)}{\sigma_n(\tan\delta_U + \tan\delta_L)}$$
$$= \frac{(7.0)[\cos 18.4 - (\sin 18.4)(\tan 30)]}{(16.5)(0.30)[\tan 0 + \tan 30]}$$
$$= \frac{5.37}{2.86}$$
$$L_{RO} = 1.9 \text{ m}$$

Note that this value is strongly dependent on the value of mobilized allowable stress used in the analysis. To mobilize the failure strength of the geomembrane would require a longer runout length or embedment in an anchor trench. This, however, might not be desirable. Pullout without geomembrane failure might be a preferable phenomenon. It is a site-specific situation left up to the designer.

The situation with an anchor trench at the end of the runout section is illustrated in Figure 5.28. The configuration requires some important assumptions regarding the state of stress within the anchor trench and its resistance mechanism. In order to provide lateral resistance, the vertical portion within the anchor trench has lateral forces acting upon it. More specifically, an active earth pressure (P_A) is tending to destabilize the situation, whereas a passive earth pressure (P_P) is tending to resist pullout. As will be shown, this passive earth pressure is very effective in providing a resisting force (see Holtz and Kovacs [48]). Using the free-body diagram of Figure 5.28,

$$\Sigma F_x = 0$$
$$T_{\text{allow}} \cos\beta = F_{U\sigma} + F_{L\sigma} + F_{LT} - P_A + P_P \tag{5.26}$$

where

T_{allow} = allowable force in geomembrane = $\sigma_{\text{allow}}\, t$, where
σ_{allow} = allowable stress in geomembrane, and
t = thickness of geomembrane;
β = side slope angle;
$F_{U\sigma}$ = shear force above geomembrane due to cover soil (note that for thin cover soils, tensile cracking will occur, and this value will be negligible);

Technically Complete, March 11, 2016

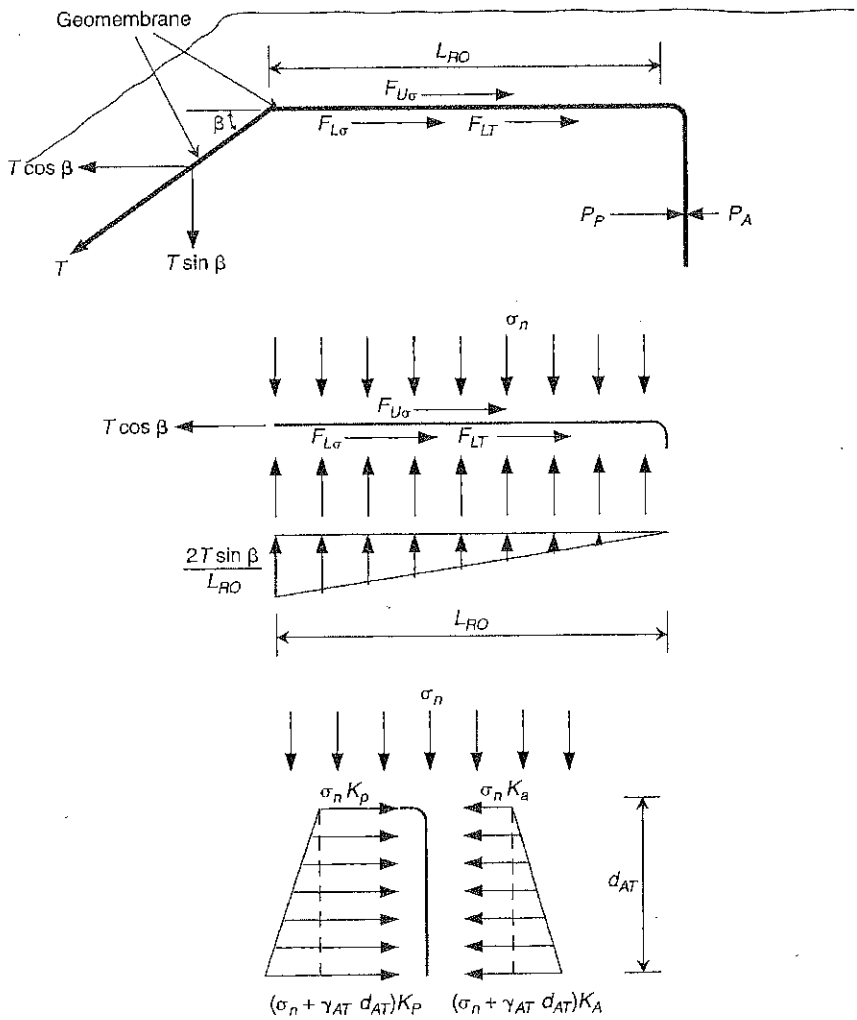

Figure 5.28 Cross section of geomembrane runout section with anchor trench and related stresses and forces involved.

$F_{L\sigma}$ = shear force below geomembrane due to cover soil
F_{LT} = shear force below geomembrane due to vertical component of T_{allow};
P_A = active earth pressure against the backfill side of the anchor trench; and
P_P = passive earth pressure against the in-situ side of the anchor trench.

The values of $F_{U\sigma}$, $F_{L\sigma}$, and F_{LT} have been defined previously. The values of P_A and P_P require the use of lateral earth pressure theory.

Technically Complete, March 11, 2016

$$P_A = \frac{1}{2}(\gamma_{AT} d_{AT}) K_A d_{AT} + (\sigma_n) K_A d_{AT}$$

$$P_A = (0.5\gamma_{AT} d_{AT} + \sigma_n) K_A d_{AT} \tag{5.27}$$

$$P_P = (0.5\gamma_{AT} d_{AT} + \sigma_n) K_P d_{AT} \tag{5.28}$$

where

γ_{AT} = unit weight of soil in anchor trench,
d_{AT} = depth of the anchor trench,
σ_n = applied normal stress from cover soil,
K_A = coefficient of active earth pressure = $\tan^2(45 - \phi/2)$,
K_P = coefficient of passive earth pressure = $\tan^2(45 + \phi/2)$, and
ϕ = angle of shearing resistance of respective soil.

This situation results in one equation with two unknowns; thus a choice of either L_{RO} or d_{AT} is necessary to calculate the other. As with the previous situation, the factor of safety is placed on the geomembrane force T, which is used as an allowable value, T_{allow}. Example 5.14 illustrates the procedure.

Example 5.14

Consider a 1.5 mm thick HDPE geomembrane extending out of a facility as shown in Figure 5.28. What depth anchor trench is needed if the runout distance is limited to 1.0 m? In the solution, use a geomembrane allowable stress of 16,000 kPa on a 3(H) to 1(V) side slope. Cover soil at 16.5 kN/m^3 and 300 mm thick is placed over the geomembrane runout and anchor trench (this is also the unit weight of the anchor trench soil). The friction angle of the geomembrane to the soil is 30° (although assume 0° for the top of the geomembrane under a soil-cracking assumption) and the soil itself is 35°. Also, develop a design chart for this example assuming that the runout length is not limited to 1.0 m.

Solution: Using the previously developed design equations based on Figure 5.28,

$$\begin{aligned} T_{\text{allow}} &= \sigma_{\text{allow}} t \\ &= 16000(0.0015) \\ &= 24.0 \text{ kN/m} \end{aligned}$$

and

$$\begin{aligned} F_{U\sigma} &= \sigma_n \tan \delta_U (L_{RO}) \\ &= (0.3)(16.5) \tan 0 (L_{RO}) \\ &= 0 \end{aligned}$$

$$\begin{aligned} F_{L\sigma} &= \sigma_n \tan \delta_L (L_{RO}) \\ &= (0.3)(16.5) \tan 30 (L_{RO}) \\ &= 2.86 L_{RO} \end{aligned}$$

$$\begin{aligned} F_{LT} &= T_{\text{allow}} \sin \beta \tan \delta_L \\ &= (24.0) \sin 18.4 \tan 30 \\ &= 4.37 \text{ kN/m} \end{aligned}$$

Technically Complete, March 11, 2016

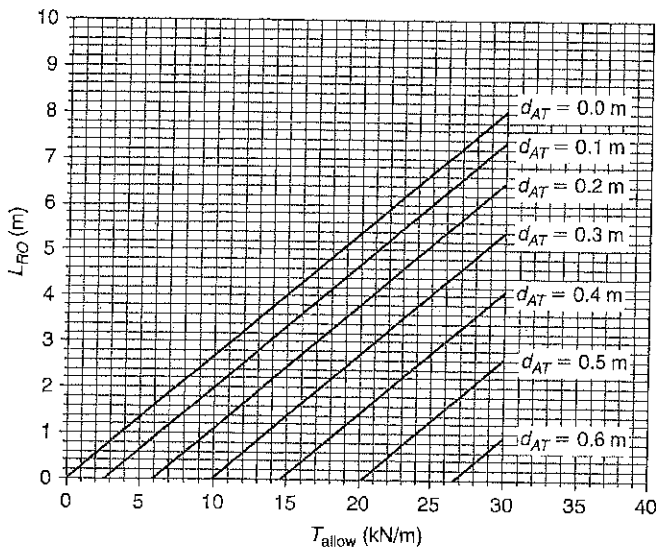

$$
\begin{aligned}
P_A &= (0.5\gamma_{AT}d_{AT} + \sigma_n)K_A d_{AT} \\
&= [(0.5)(16.5)d_{AT} + (0.3)(16.5)]\tan^2(45 - 35/2)d_{AT} \\
&= [8.25d_{AT} + 4.95](0.271)d_{AT} \\
&= 2.24d_{AT}^2 + 1.34d_{AT}
\end{aligned}
$$

$$
\begin{aligned}
P_P &= (0.5\gamma_{AT}d_{AT} + \sigma_n)K_P d_{AT} \\
&= [(0.5)(16.5)d_{AT} + (0.3)(16.5)]\tan^2(45 + 35/2)d_{AT} \\
&= [8.25d_{AT} + 4.95](3.69)d_{AT} \\
&= 30.4d_{AT}^2 + 18.3d_{AT}
\end{aligned}
$$

This is substituted into the general force equation (5.26) to arrive at the solution in terms of the two variables L_{RO} and d_{AT}:

$$
\begin{aligned}
T_{\text{allow}}\cos\beta &= F_{U\sigma} + F_{L\sigma} + F_{LT} - P_A + P_P \\
(24.0)\cos 18.4 &= 0 + 2.86\,L_{RO} + 4.37 - 2.24d_{AT}^2 \\
&\quad - 1.34d_{AT} + 30.4d_{AT}^2 + 18.3d_{AT} \\
18.4 &= 2.86L_{RO} + 17.0d_{AT} + 28.2d_{AT}^2
\end{aligned}
$$

Since $L_{RO} = 1.0$ m, the equation can be solved for the unknown d_{AT}.

$$d_{AT} = 0.50 \text{ m}$$

Using this formulation, we can develop a *design chart* for a wide range of geomembranes and thicknesses as characterized by different values of T_{allow}. For the specific conditions of Example 5.14, we obtain

$$
\begin{aligned}
\beta &= 18.4°, \text{ which is } 3(H) \text{ to } 1(V) \\
\sigma_n &= d_{cs}\gamma_{cs} \\
&= (0.30)(16.5) \\
&= 4.95 \text{ kN/m}^2
\end{aligned}
$$

Reference No. 5

GSE Geomembrane Specifications

Technically Complete, March 11, 2016

Product Data Sheet

The Pioneer Of Geosynthetics

S I N C E 1 9 7 2

GSE HD Textured Geomembrane

GSE HD Textured is a co-extruded textured high density polyethylene (HDPE) geomembrane available on one or both sides. It is manufactured from the highest quality resin specifically formulated for flexible geomembranes. This product is used in applications that require increased frictional resistance, excellent chemical resistance and endurance properties.

Product Specifications *These product specifications meet or exceed GRI GM13.*

TESTED PROPERTY	TEST METHOD	FREQUENCY	MINIMUM AVERAGE VALUE				
			30 mil	40 mil	60 mil	80 mil	100 mil
Thickness, (minimum average) mil (mm)	ASTM D 5994	every roll	30 (0.75)	40 (1.00)	60 (1.50)	80 (2.00)	100 (2.50)
Lowest individual reading (-10%)			27 (0.69)	36 (0.91)	54 (1.40)	72 (1.80)	90 (2.30)
Density, g/cm³	ASTM D 1505	200,000 lb	0.94	0.94	0.94	0.94	0.94
Tensile Properties (each direction)	ASTM D 6693, Type IV	20,000 lb					
Strength at Break, lb/in-width (N/mm)	Dumbell, 2 ipm		66 (11)	75 (13)	115 (20)	155 (27)	230 (40)
Strength at Yield, lb/in-width (N/mm)			68 (11)	90 (15)	132 (23)	177 (31)	225 (39)
Elongation at Break, %	G.L. 2.0 in (51 mm)		100	100	100	100	100
Elongation at Yield, %	G.L. 1.3 in (33 mm)		12	12	12	12	12
Tear Resistance, lb (N)	ASTM D 1004	45,000 lb	24 (106)	32 (142)	45 (200)	60 (266)	75 (333)
Puncture Resistance, lb (N)	ASTM D 4833	45,000 lb	65 (289)	95 (422)	130 (578)	160 (711)	190 (845)
Carbon Black Content, % (Range)	ASTM D 1603*/4218	20,000 lb	2.0 - 3.0	2.0 - 3.0	2.0 - 3.0	2.0 - 3.0	2.0 - 3.0
Carbon Black Dispersion	ASTM D 5596	45,000 lb	Note[1]	Note[1]	Note[1]	Note[1]	Note[1]
Asperity Height, mil (mm)	ASTM D 7466	second roll	16 (0.40)	18 (0.45)	18 (0.45)	18 (0.45)	18 (0.45)
Notched Constant Tensile Load[2], hr	ASTM D 5397, Appendix	200,000 lb	1,000	1,000	1,000	1,000	1,000
Oxidative Induction Time, min	ASTM D 3895, 200° C; O_2, 1 atm	200,000 lb	>140	>140	>140	>140	>140
TYPICAL ROLL DIMENSIONS							
Roll Length[3], ft (m)	Double-Sided Textured		830 (253)	700 (213)	520 (158)	400 (122)	330 (101)
	Single-Sided Textured		840 (256)	650 (198)	420 (128)	320 (98)	250 (76)
Roll Width[3], ft (m)			22.5 (6.9)	22.5 (6.9)	22.5 (6.9)	22.5 (6.9)	22.5 (6.9)
Roll Area, ft² (m²)	Double-Sided Textured		18,675 (1,735)	15,750 (1,463)	11,700 (1,087)	9,000 (836)	7,425 (690)
	Single-Sided Textured		18,900 (1,755)	14,625 (1,359)	9,450 (878)	7,200 (669)	5,625 (523)

NOTES:

- [1]Dispersion only applies to near spherical agglomerates. 9 of 10 views shall be Category 1 or 2. No more than 1 view from Category 3.
- [2]NCTL for GSE HD Textured is conducted on representative smooth membrane samples.
- [3]Roll lengths and widths have a tolerance of ± 1%.
- GSE HD Textured Double-Sided is available in rolls weighing approximately 4,000 lb (1,800 kg) and Single-Sided weighing approximately 3,000 lb (1,360 kg).
- All GSE geomembranes have dimensional stability of ±2% when tested according to ASTM D 1204 and LTB of <-77° C when tested according to ASTM D 746.
- *Modified.

DS HDT 88/15/10

This information is provided for reference purposes only and is not intended as a warranty or guarantee. GSE assumes no liability in connection with the use of this information. Specifications subject to change without notice.

GSE and other trademarks in this document are registered trademarks of GSE Lining Technology, LLC in the United States and certain foreign countries.